ORTAL
YOUR LIFE. YOUR FIRE

150 TSN

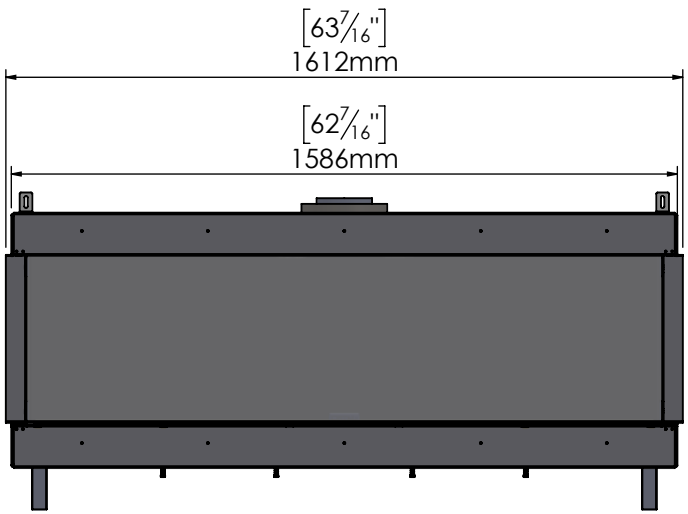

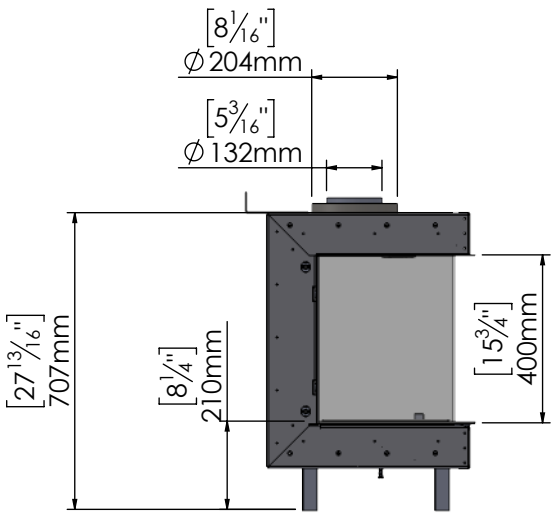

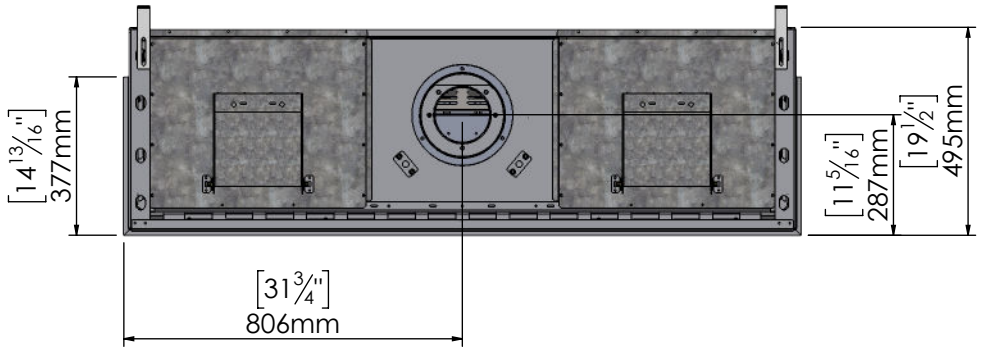

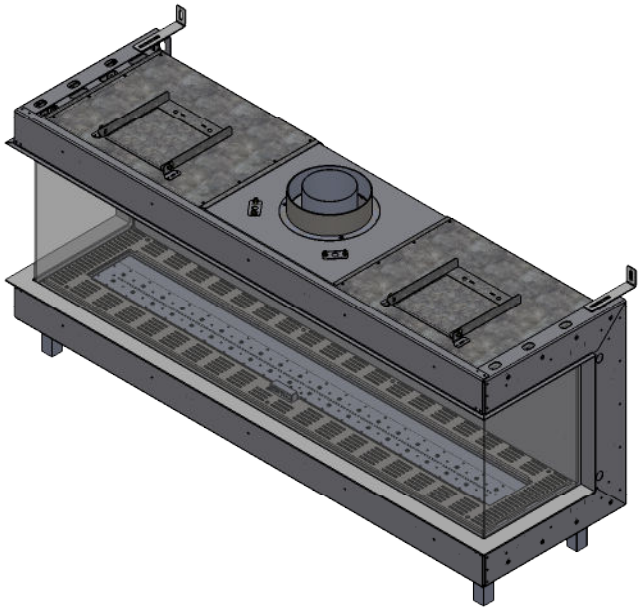

3/30/2022