ORTAL
YOUR LIFE. YOUR FIRE

# 170 TSN

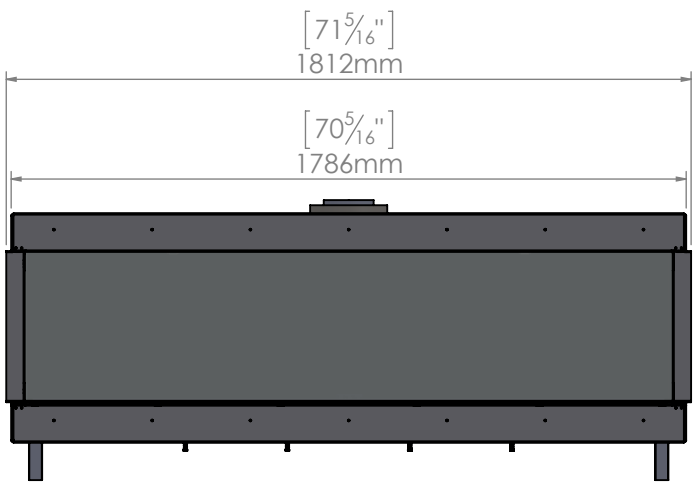


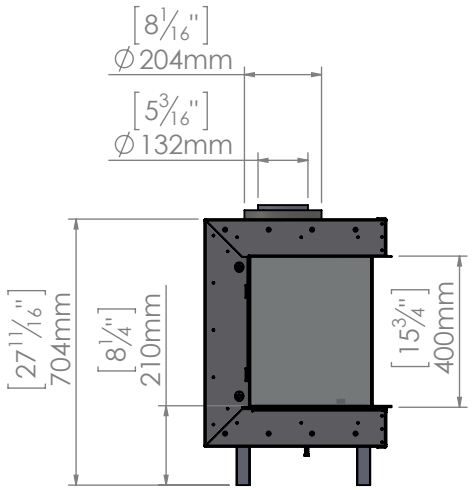


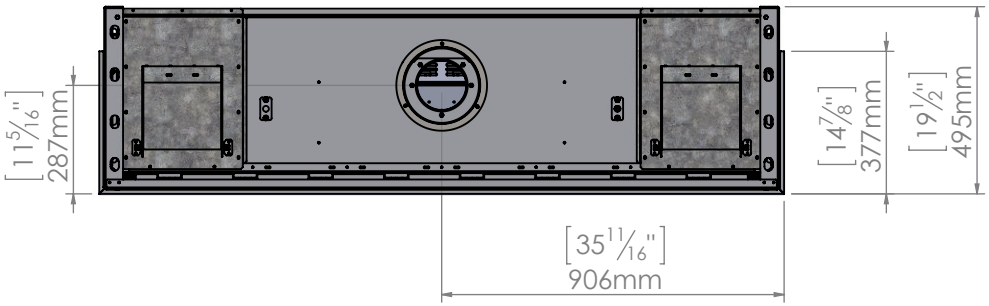


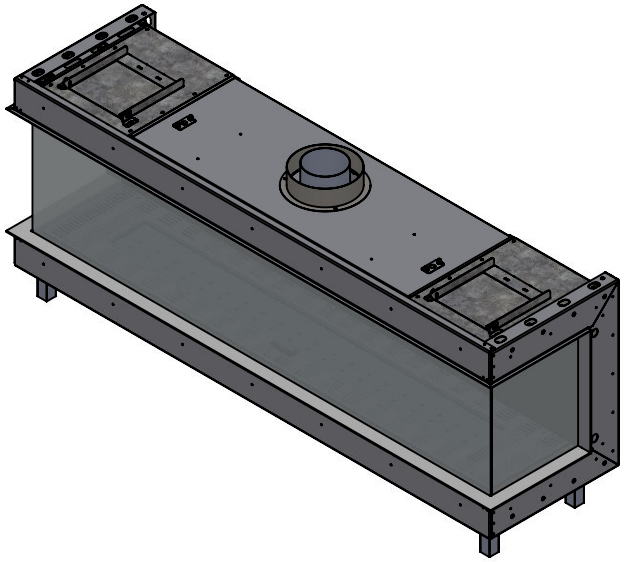

11/13/2018