ORTAL
YOUR LIFE. YOUR FIRE

250 TSN

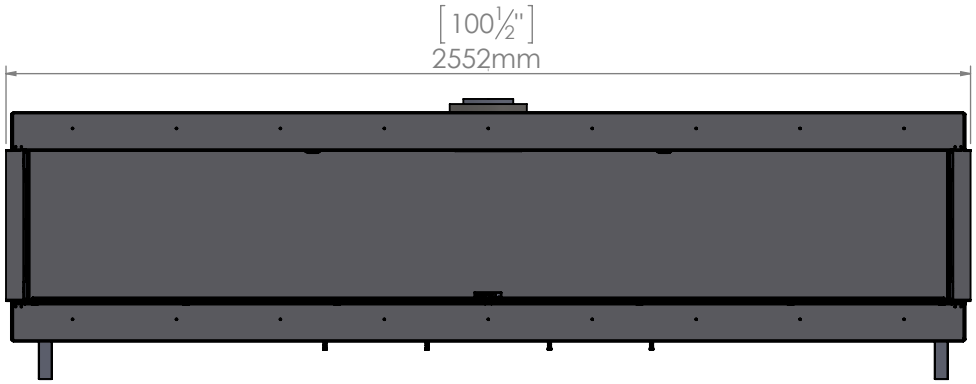

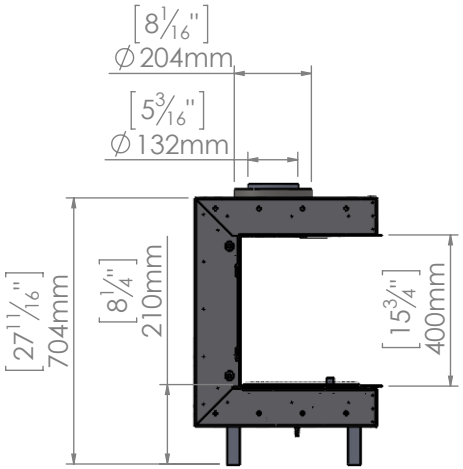

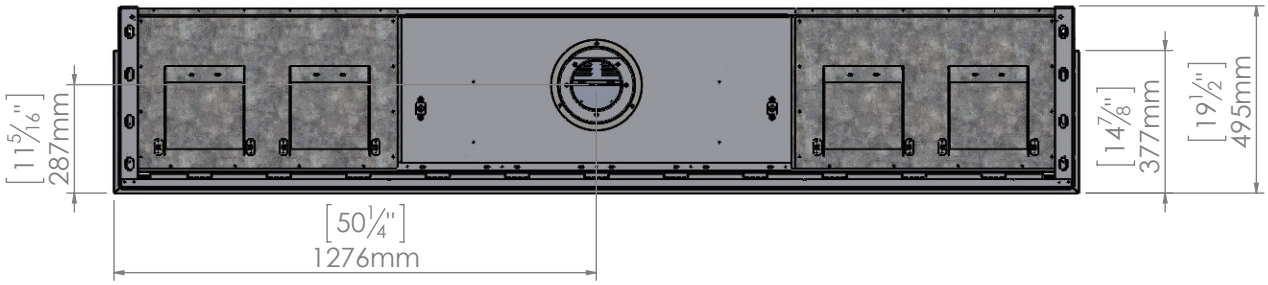

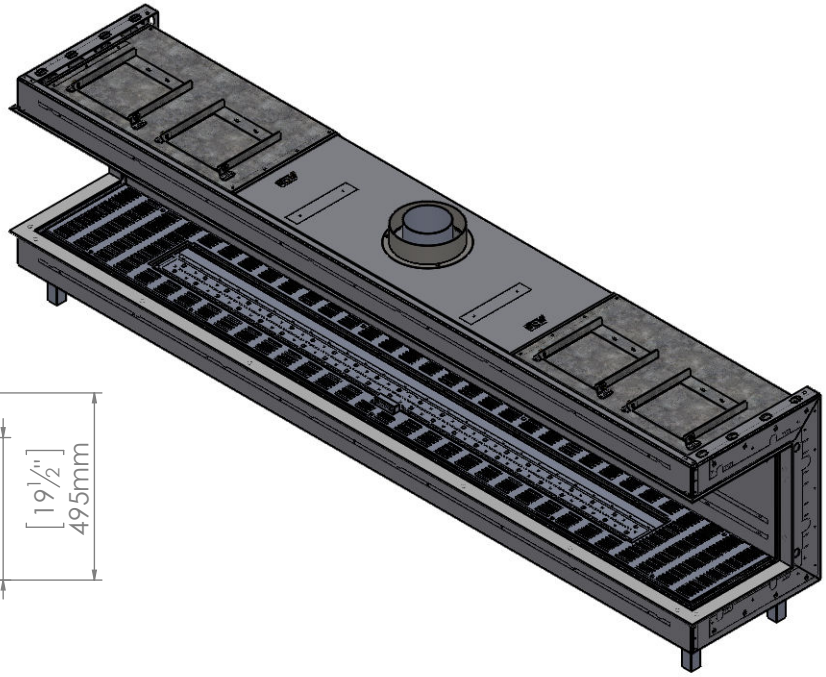

11/13/2018